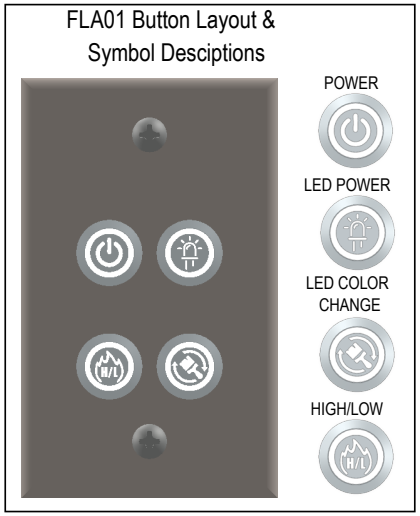

FLA EcoFlow (FLA01-EF-K001) Kit Contents				
RCG Part #	Customer Part #	Descrip on	STD/OPT	Qty/Kit
FLA01-EF1	TBD	FLA EcoFlow Bluetooth/WiFi Control Module	Standard	1
FLA01-WH14	TBD	2' 6 Pin Waterproof EcoFlow Input Cable	Standard	1
FLA01-WH16	TBD	2' 3 Pin Waterproof LED & Power Supply Cable	Standard	1
FLA01-WH17-10	TBD	10' 6 Pin Waterproof EcoFlow Extension Cable	Standard	1
FLA01-WH18-10	TBD	10' 3 Pin Waterproof LED & Power Extension Cable	Standard	1
TBD	TBD	13VDC Transformer + 5m PNP Cable	Standard	1
AL-2811-B-1-72	TBD	LED Strip of Customer Speci fied Length (72")	Ordered Separately	1-2

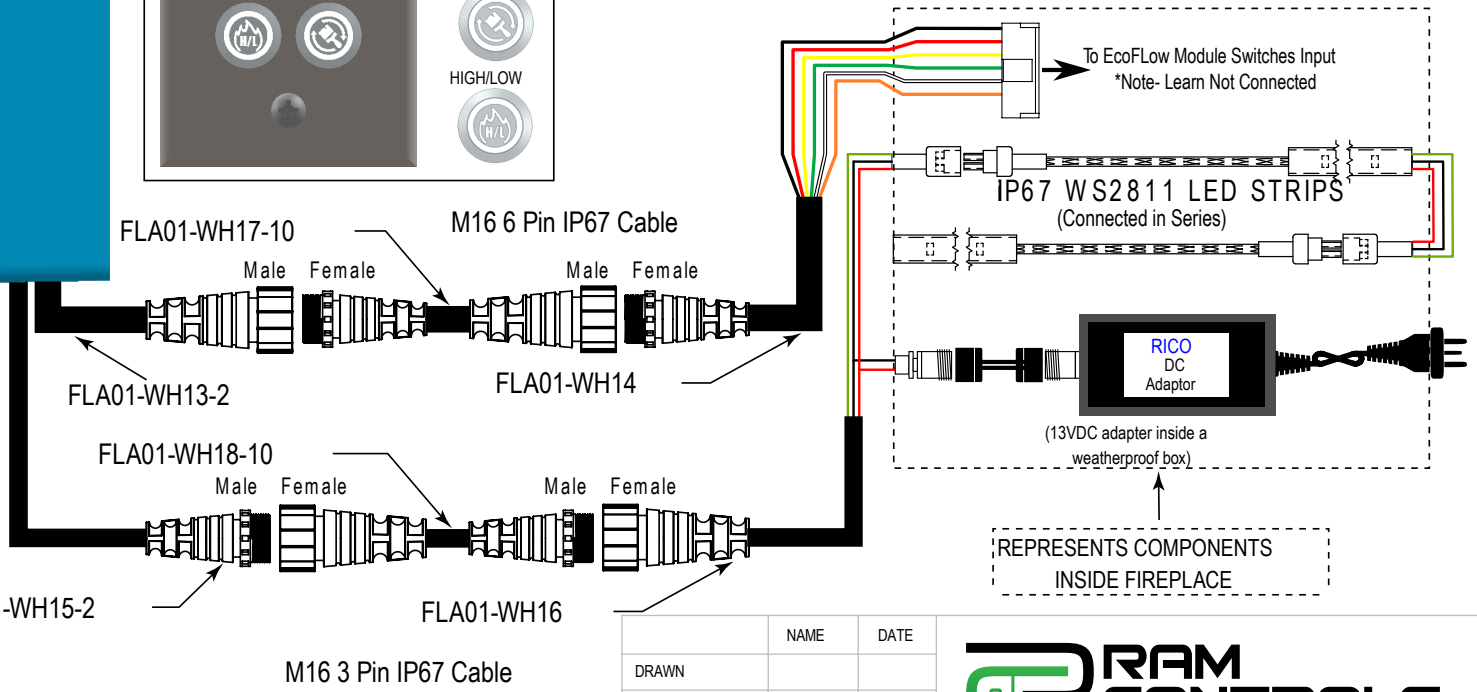

Customer Approval	Date
X _____ SIGNATURE	
_____ PRINTED NAME	

	NAME	DATE
DRAWN		
CHECKED		

UNLESS OTHERWISE SPECIFIED:
1. DIMENSIONS ARE IN INCHES
2. TOLERANCES ON DIMENSIONS:
.X ± .05
.XX ± .02
.XXX ± .005
ANGLES ± 1°
FRACTIONAL ± 1/64
BEND ± .015
3. REMOVE ALL BURRS

PROPRIETARY AND CONFIDENTIAL
THE INFORMATION CONTAINED IN THIS DRAWING IS THE SOLE PROPERTY OF RAM CONTROLS GROUP. ANY REPRODUCTION IN PART OR AS A WHOLE WITHOUT THE WRITTEN PERMISSION OF RAM CONTROLS GROUP IS PROHIBITED.

RAM CONTROLS GROUP

TITLE:
FLA01-EcoFlow Kit Diagram 002

SIZE	DWG. NO.	REV
A	FLA01-EF-KD002	A
SCALE: 1:1	WEIGHT:	SHEET 1 OF 1